IsoFlex Technologies Pty Ltd.
Unit 5, 7 Waterway Drive, Gold Coast Marine Precinct, Coomera, Queensland, Australia. 4209
Ph: 1300 366 393 Ph: 07 555 60 924 F: 07 555 60 984 Int prefix: 617
Email: info@isoflex.com.au
Home Page: www.isoflex.com.au

IsoFlex Mount Data Sheet

Loading Type:

Axial - Vertical Down (A-direction)

Mount Model: M90-20S

'M90' = model number
'20' = thread size
'S' = adjusting stud type

Resilient Element Colour	Shore Durometer Hardness A-scale SDH-A
Yellow	50
Red	60
Black	70
Royal Blue	75
Green	80
Grey	90

Base: Black - 75 SDH-D

All metal components silver zinc plated

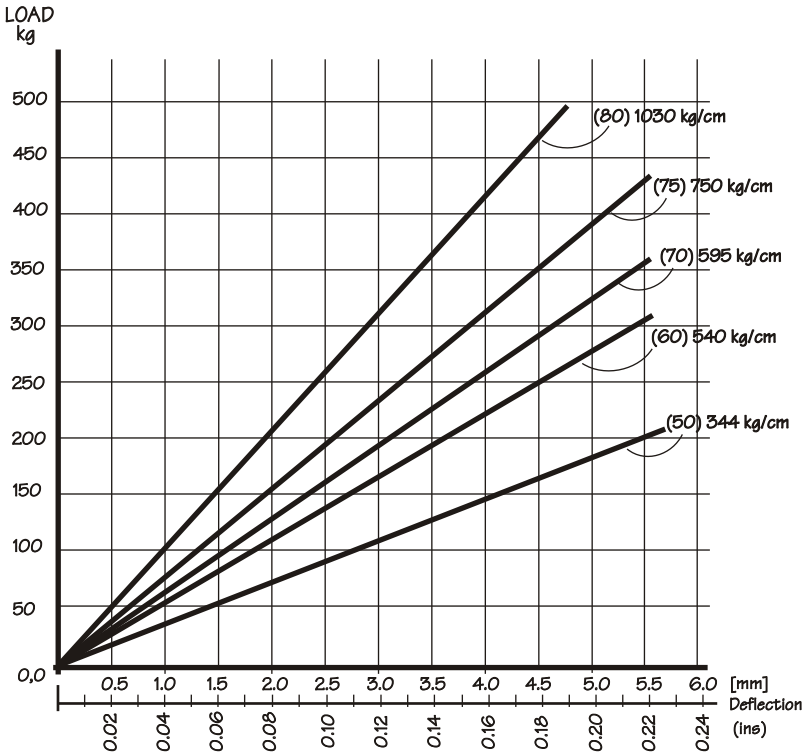

Graph 1: Static Axial Vertical Load[kg] (A-direction) versus Deflection[mm] (ins)
Data shown: (x) = SDH-A Hardness
kg/cm = Spring Rate

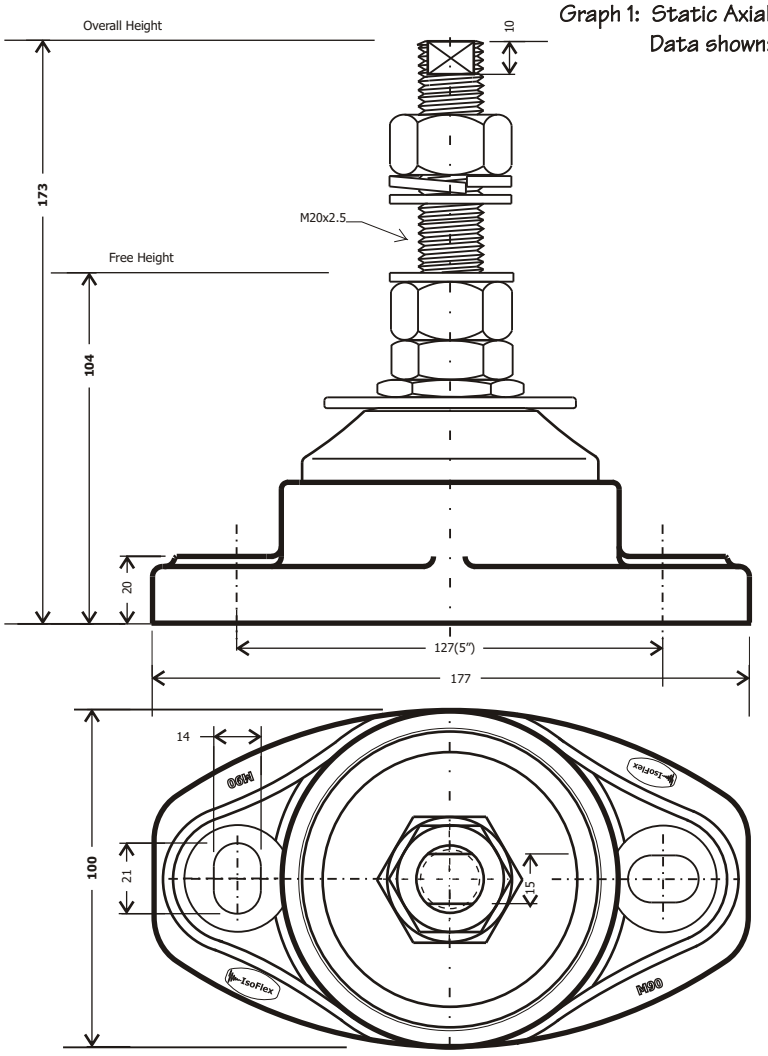

M90-20S General Arrangement

Dimensions in millimetres (mm.) - unless stated otherwise

Model Number: M90-24S(60) illustrated

Drawing number: DSA-M90-20S
Drawn: PB Date:17-8-06

Copyright © 2006 **IsoFlex Technologies Pty Ltd.**
Specifications are subject to change without notice.